SRT-WMSD
SRT-WSD□
SRT-WPMSD
SRT-WPSD□
SRTA-WMSD
SRTA-WSD□
SRTA-WPMSD
SRTA-WPSD□

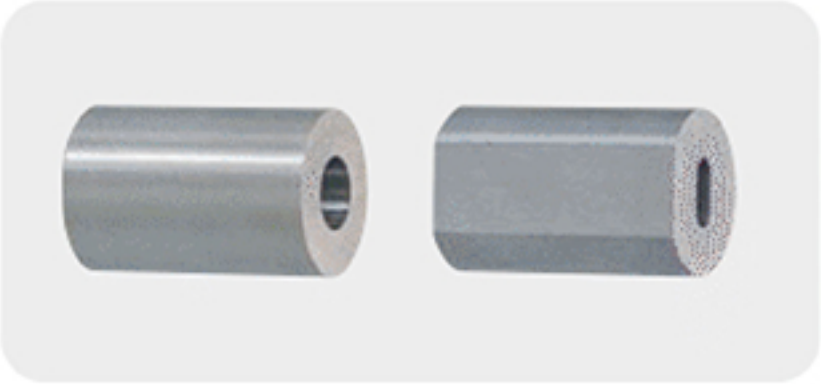

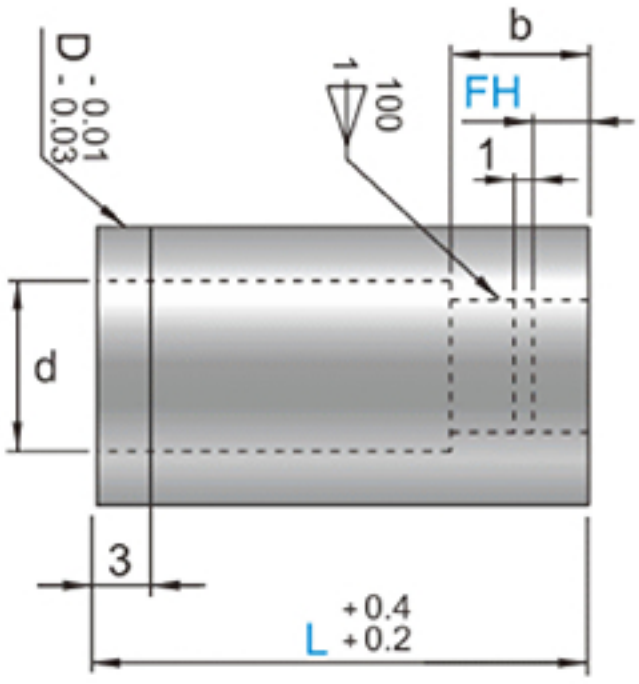

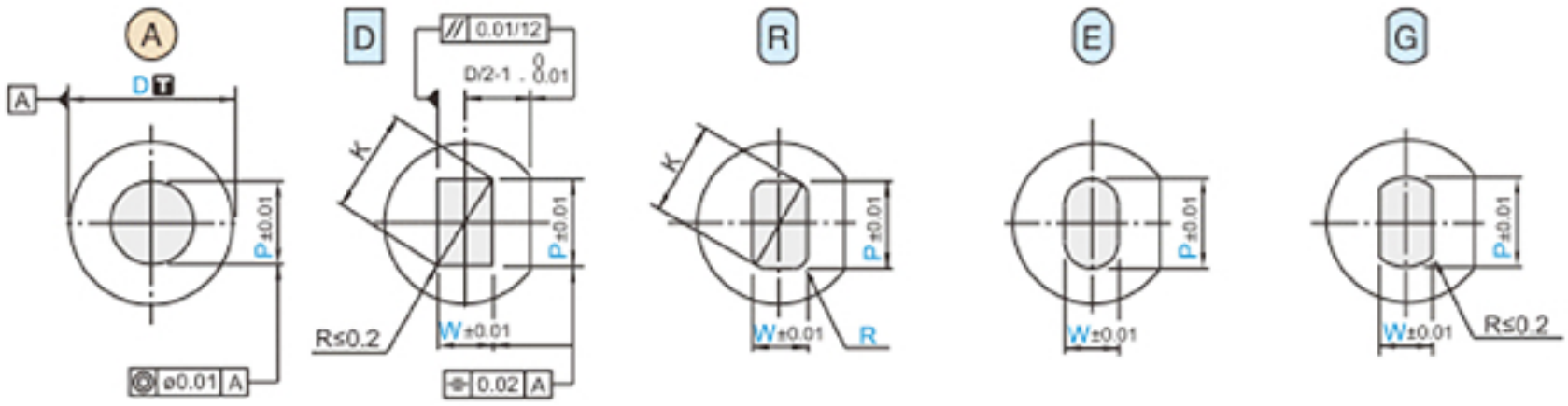

A	D	R	E	G
P≥W	P≥W	P≥W	P>W	P>W
	$K=\sqrt{P^2+W^2}$	0.20 ≤ R < W/2		$\sqrt{P^2-W^2}\geq 1.5$
	P - 0.4 ≥1.5	$K=\sqrt{(P-2R)^2+(W-2R)^2}+2R$		
		P - 2R≥1.5		

T	M	H	D	Catalog No. Type	
D n5	SKD11	60~63HRC	D8~25	D E R G	SRT-WSD□
			D6~25	A	SRT-WMSD
	SKH51	61~64HRC	D5		
		64~67HRC	D6~25	A	SRT-WPMSD
			D8~25	D E R G	SRT-WPSD□
$D^{+0.005}_{0}$	SKD11	60~63HRC	D8~16	D E R G	SRTA-WSD□
			D6~16	A	SRTA-WMSD
	SKH51	61~64HRC	D5		
		64~67HRC	D4~16	A	SRTA-WPMSD
			D6~16	D E R G	SRTA-WPSD□

ORDER	Catalog No.	- L	- P (0.01mm)	- W	- R(Ⓡ)	- MT	- C (0.005mm)	- TS	- FH (0.1mm)
	SRT-WSDR 13	- 35	- P5.25	- W2.82	- R0.4	- MT1.5	- C0.105	- H	- FH2.0

D n5	+0.005 0	Catalog No. Type	D	L	Ⓐ P	Ⓓ Ⓔ Ⓡ Ⓖ PKmax.	PWmin.	Ⓡ R	MT	C	TS	FH	b	d
+0.013 +0.008	+0.005 0	(D n5) (SKH51) (D+0.005 0) Ⓐ SRT-WMSD SRTA-WMSD	5	16·20·22·25·28·30	2.00 ~ 2.50	—	—	0.15 ~ W/2	MT ≥ 0.5	C ≥ 0.060		1.0	2	2.9
+0.016 +0.010		(D n5) (SKD11) (D+0.005 0) Ⓐ SRT-WMSD SRTA-WMSD	6	16·20·22·25·28·30·32·35	2.00 ~ 3.00	—	—					1.0~2.0	3	3.4
		Ⓓ SRT-WSDD SRTA-WSDD	8		2.00 ~ 4.00	4.00	2.00					1.0~3.0	4	4.4
+0.020 +0.012		Ⓡ SRT-WSDR SRTA-WSDR	10	16·20·22·25·28·30·32·35·(40)	2.00 ~ 6.00	6.00	2.00					1.0~5.0	6	6.4
		Ⓔ SRT-WSDE SRTA-WSDE	13		3.00 ~ 8.00	8.00	2.00					1.0~7.0	8	8.4
+0.024 +0.015		Ⓖ SRT-WSDG SRTA-WSDG	16		5.00 ~ 10.00	10.00	2.00							10.6
			(20)		7.00 ~ 12.00	12.00	3.00							12.6
			(22)		8.00 ~ 14.00	14.00	3.00							14.6
			(25)		10.00 ~ 16.00	16.00	3.00							16.6
+0.013 +0.008		(D n5) (D+0.005 0) Ⓐ SRT-WPMSD SRTA-WPMSD	6	16·20·22·25 ·30 ·35	2.00 ~ 3.00	—	—	Ⓡ				1.0~2.0	3	3.4
+0.016 +0.010		Ⓓ SRT-WPSDD SRTA-WPSDD	8		2.00 ~ 4.00	4.00	2.00					1.0~3.0	4	4.4
		Ⓡ SRT-WPSDR SRTA-WPSDR	10		2.00 ~ 6.00	6.00	2.00					1.0~5.0	6	6.4
+0.020 +0.012		Ⓔ SRT-WPSDE SRTA-WPSDE	13		3.00 ~ 8.00	8.00	2.00					1.0~7.0	8	8.4
		Ⓖ SRT-WPSDG SRTA-WPSDG	16		5.00 ~ 10.00	10.00	2.00							10.6
+0.024 +0.015			(20)		7.00 ~ 12.00	12.00	3.00							12.6
			(25)		10.00 ~ 16.00	16.00	3.00							16.6

① D= (20) (22) (25)

① 1/100

① L= (40)

	(N/mm²)
H	800 ~
M	600 ~
L	~ 599

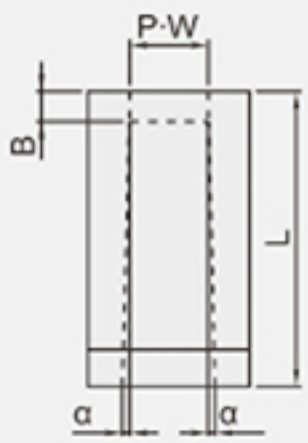

(α×2) (B = 2)

L	1/50	1/100	1/150
16	0.28	0.14	0.09
20	0.36	0.18	0.12
22	0.40	0.20	0.13
25	0.46	0.23	0.15
30	0.56	0.28	0.19
35	0.66	0.33	0.22
40	0.76	0.38	0.25